NOTES:
-T-FRAME ACCEPTS A MAXIMUM OF 9 TOTAL ANTENNA PIPES (3 PER SECTOR AS SHOWN).
-GALVANIZED ALL THREAD MAY REQ. FIELD TRIM TO FIT FOR SMALL O.D. POLES.
-ANTENNA PIPE MOUNTS SOLD SEPARATELY.

ITEM NO.	PART NUMBER	DESCRIPTION	FINISH	WEIGHT (PER)	QTY.
1	MP1004.01	10'- 45" 3 SECTOR RING MOUNT (WELDMENT)	H.D.G.	66.94	3
2	MP1140.01	36" T-ARM PIPE SUPPORT (WELDMENT)	H.D.G.	70.17	3
3	MP1186.01	15" CENTER CHANNEL BRACKET (WELDMENT)	H.D.G.	14.21	3
4	GP3500.054	PLAIN END GALV PIPE, 3-1/2" O.D. x 54" (4'-6")	H.D.G.	34.21	3
5	GU43550	1/2" x 5-1/2" x 3-5/8" x 2-1/2" U-BOLT	H.D.G.	0.77	12
6	GF04	1/2" FLAT WASHER	H.D.G.	0.04	24
7	GL04	1/2" LOCK WASHER	H.D.G.	0.02	24
8	GN04A	1/2" HEX NUT (2H)	H.D.G.	0.06	24
9	GU54574	5/8" x 7-1/2" x 4-5/8" x 2-1/2" U-BOLT	H.D.G.	1.62	6
10	GF05	5/8" FLAT WASHER	H.D.G.	0.08	12
11	GL05	5/8" LOCK WASHER	H.D.G.	0.03	24
12	GN05A	5/8" HEX NUT (2H)	H.D.G.	0.12	24
13	GB0524A	5/8" x 2-1/2" HEX BOLT	H.D.G.	0.33	12
14	GR750.040	3/4" x 40" THREADED ROD	H.D.G.	5.01	6
15	GF06A	3/4" FLAT WASHER	H.D.G.	0.05	12
16	GL06	3/4" LOCK WASHER	H.D.G.	0.05	12
17	GN06A	3/4" HEX NUT (2H)	H.D.G.	0.18	12

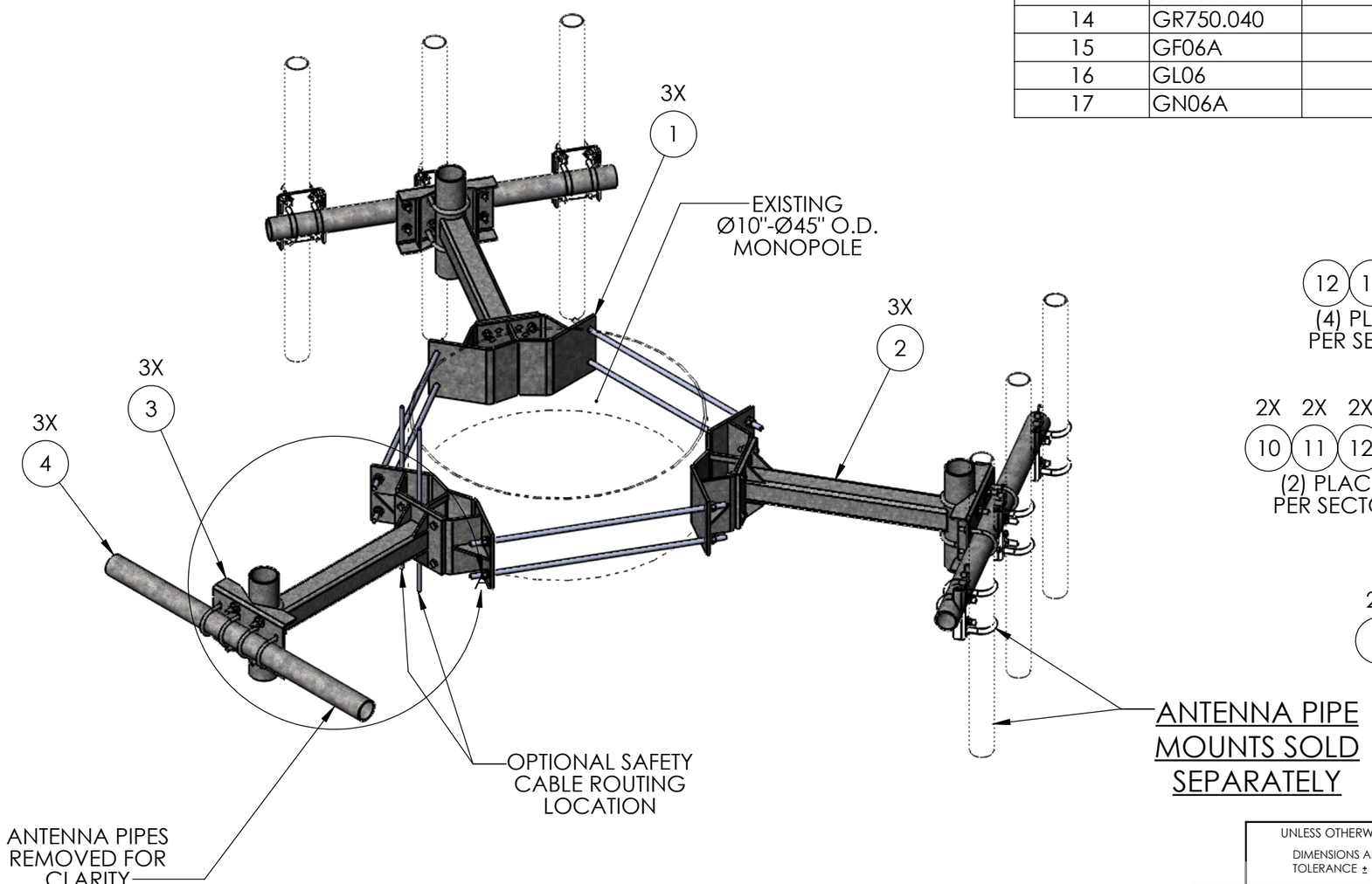

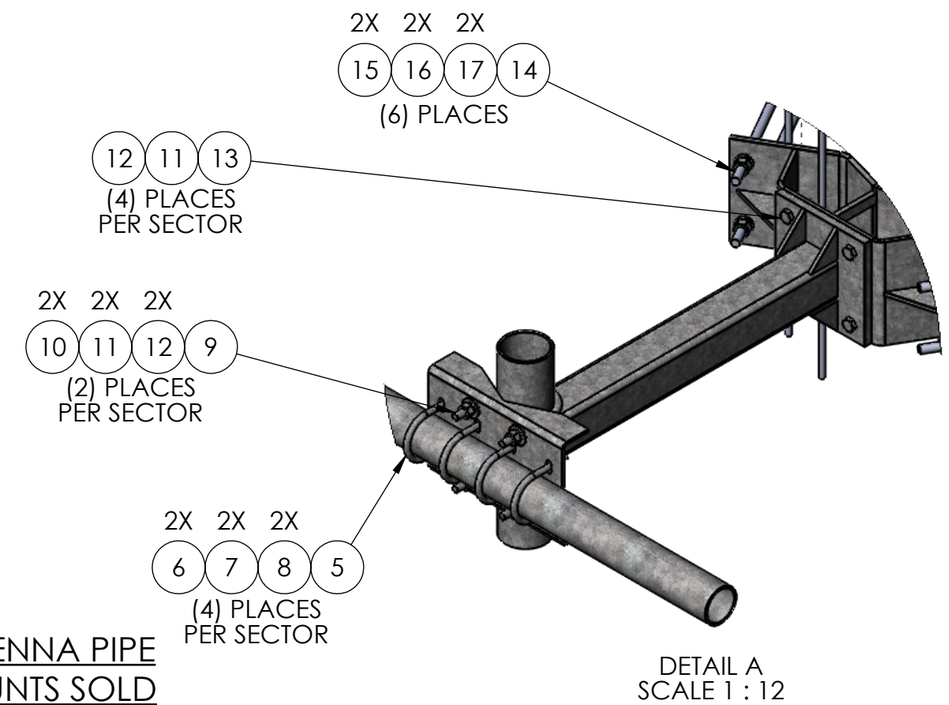

DETAIL A
SCALE 1 : 12

UNLESS OTHERWISE SPECIFIED:
DIMENSIONS ARE IN INCHES
TOLERANCE ± 1/16

SIZE B
MATERIAL -
FINISH H.D.G.

PROPRIETARY AND CONFIDENTIAL
THE INFORMATION CONTAINED IN THIS DRAWING IS THE SOLE PROPERTY OF PRO TOWER MANUFACTURING L.L.C. ANY REPRODUCTION IN PART OR AS A WHOLE WITHOUT THE WRITTEN PERMISSION OF PRO TOWER MANUFACTURING L.L.C. IS PROHIBITED.

DESCRIPTION: 3 SECTOR, 4FT-6IN T-FRAME WITH 36IN SUPPORT ARM, 10-45 POLE, ANTENNA PIPE AND MOUNT NOT INCLUDED

PRO TOWER MANUFACTURING L.L.C.
5601 San Francisco St. NE
Albuquerque, N.M. 87109
(505) 924-2810

DWG NO: MPTK3.054

DRAWN BY: AJK	DATE: 7/14/2022	REV
CHECKED BY: E. FILMER	DATE: 7/14/2022	WEIGHT: 620.37
SHEET: 1 of 2	SCALE: NTS	

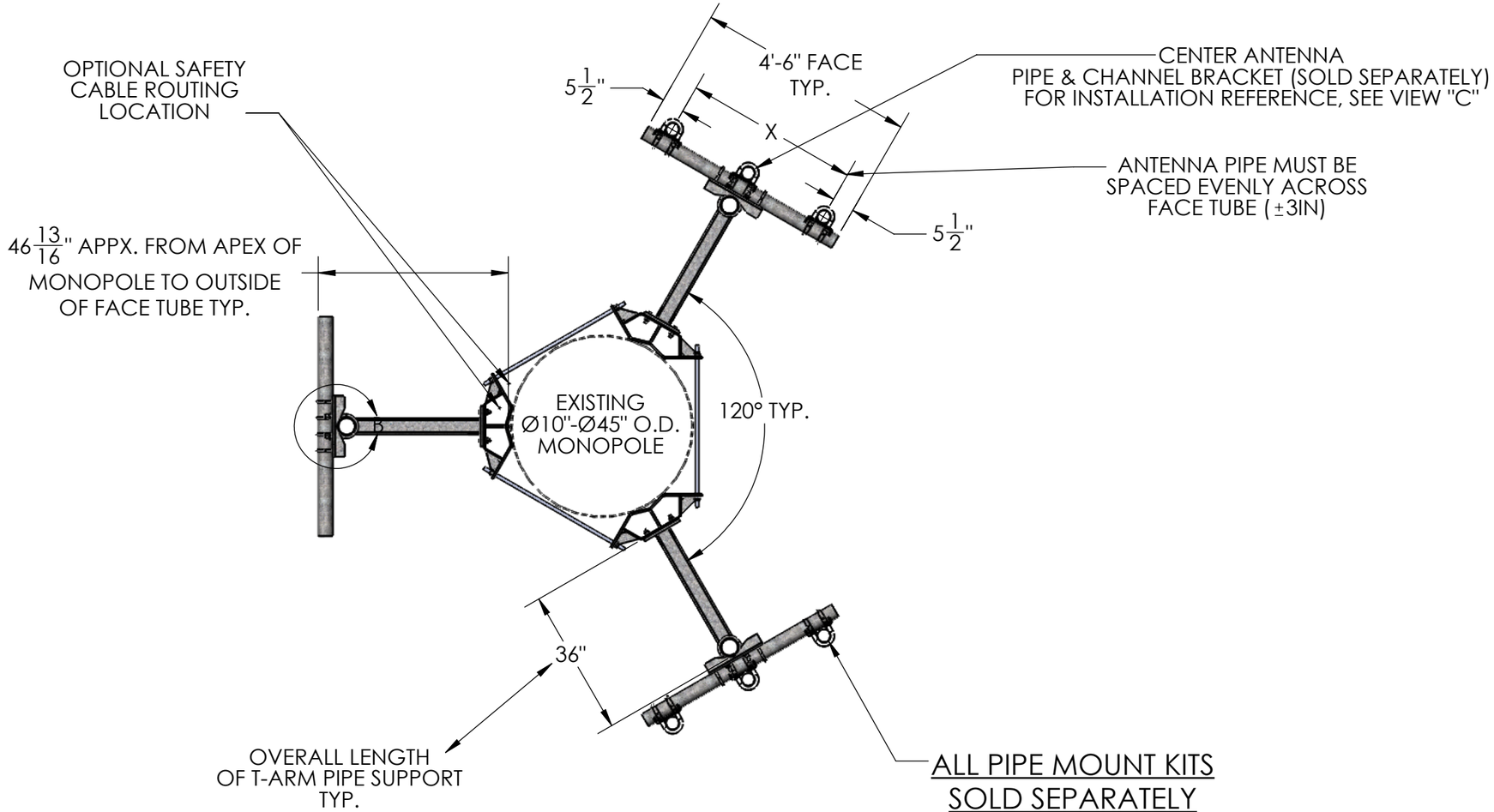

VIEW C (SOLD SEPARATELY)

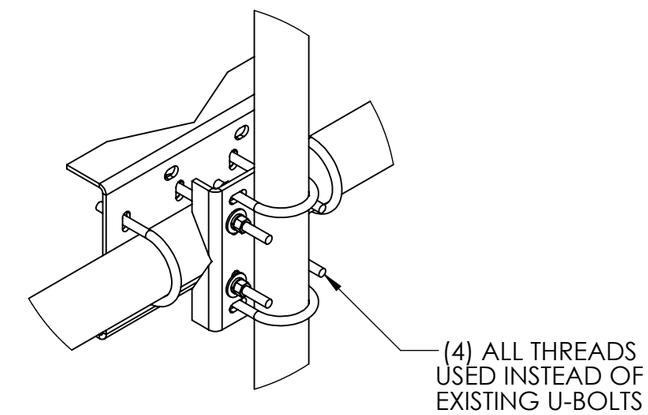

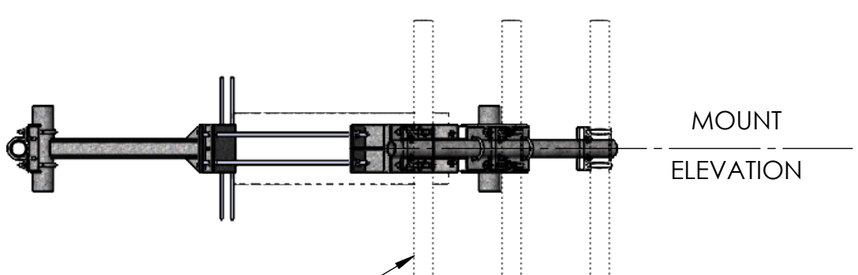

72IN - 126IN ANTENNA PIPE LENGTHS STANDARD, CUSTOM LENGTHS AVAILABLE

T-FRAME INCLUDES (4) U-BOLTS TO ATTACH FACE TUBE TO 15" CHANNEL BRACKET AS SHOWN (TYP. PER SECTOR)

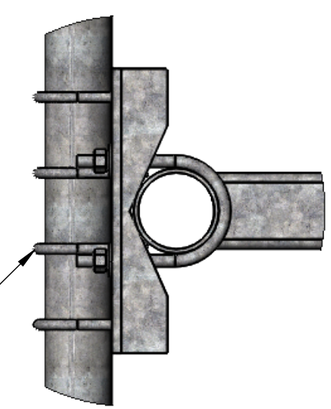

DETAIL B
SCALE 1 : 8

UNLESS OTHERWISE SPECIFIED: DIMENSIONS ARE IN INCHES TOLERANCE ± 1/16	DESCRIPTION: 3 SECTOR, 4FT-6IN T-FRAME WITH 36IN SUPPORT ARM, 10-45 POLE, ANTENNA PIPE AND MOUNT NOT INCLUDED		
SIZE B	PRO TOWER MANUFACTURING L.L.C. 5601 San Francisco St. NE Albuquerque, N.M. 87109 (505) 924-2810	DWG NO: MPTK3.054	
MATERIAL -		DRAWN BY: AJK / DATE: 7/14/2022	REV
FINISH H.D.G.		CHECKED BY: T.SMYTHE / DATE: 7/14/2022	WEIGHT: 620.37
		SHEET: 2 of 2 / SCALE: NTS	

PROPRIETARY AND CONFIDENTIAL
THE INFORMATION CONTAINED IN THIS DRAWING IS THE SOLE PROPERTY OF PRO TOWER MANUFACTURING L.L.C. ANY REPRODUCTION IN PART OR AS A WHOLE WITHOUT THE WRITTEN PERMISSION OF PRO TOWER MANUFACTURING L.L.C. IS PROHIBITED.