ITEM NO.	PART NUMBER	DESCRIPTION	FINISH	WEIGHT (PER)	QTY.
1	EQP36.01	PLATFORM FRAME 3' x 6' (WELDMENT)	H.D.G.	127.86	1
2	BG36	BAR GRATING 1" x 36" x 72"	H.D.G.	89.19	1
3	GC3003	G-STYLE GRATE CLIP	H.D.G.	0.22	4
4	GB0416A	1/2" x 1-3/4" BOLT	H.D.G.	0.16	6
5	GF04	1/2" FLAT WASHER	H.D.G.	0.04	12
6	GL04	1/2" LOCK WASHER	H.D.G.	0.02	6
7	GN04A	1/2" HEX NUT	H.D.G.	0.06	6

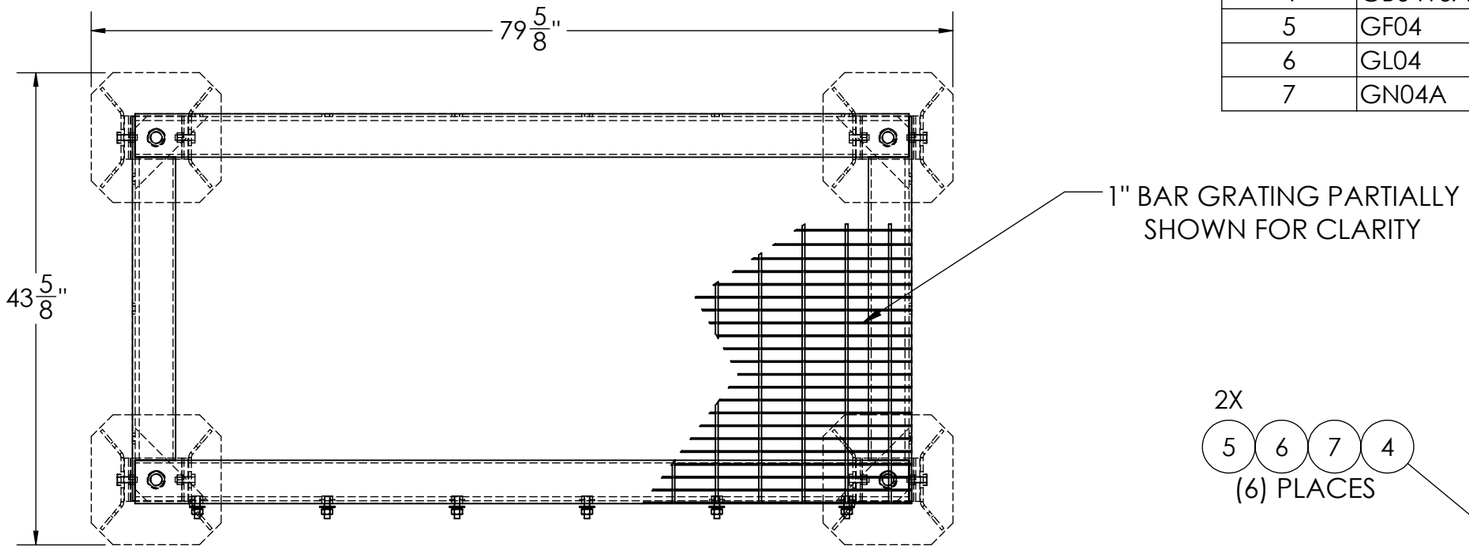

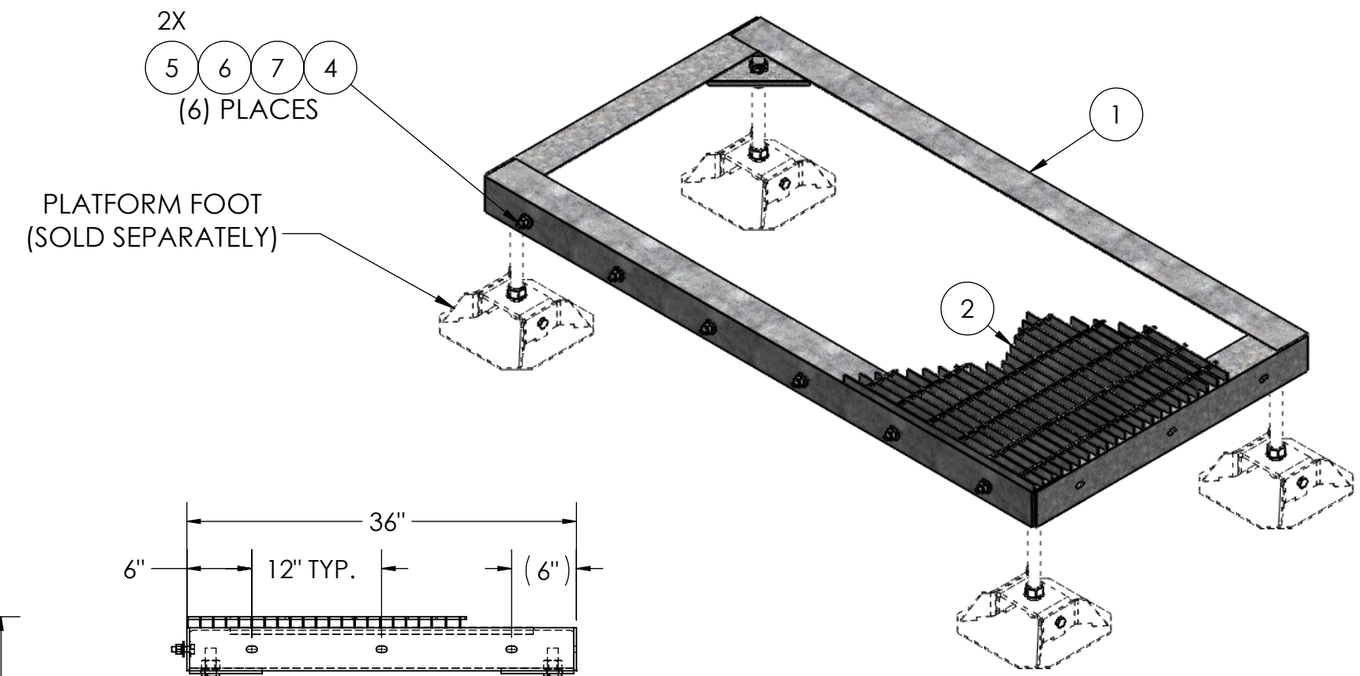

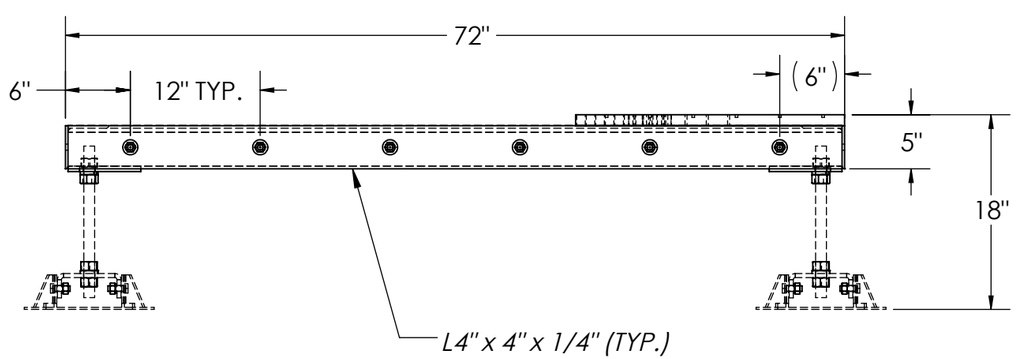

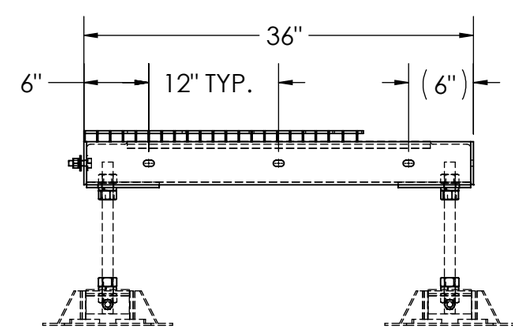

UNLESS OTHERWISE SPECIFIED:
DIMENSIONS ARE IN INCHES
TOLERANCE ± 1/16

SIZE B

MATERIAL -

FINISH H.D.G.

PROPRIETARY AND CONFIDENTIAL
THE INFORMATION CONTAINED IN THIS DRAWING IS THE SOLE PROPERTY OF PRO TOWER MANUFACTURING L.L.C. ANY REPRODUCTION IN PART OR AS A WHOLE WITHOUT THE WRITTEN PERMISSION OF PRO TOWER MANUFACTURING L.L.C. IS PROHIBITED.

DESCRIPTION: EQUIPMENT PLATFORM, 3' x 6'

PRO TOWER MANUFACTURING L.L.C.
5601 San Francisco St. NE
Albuquerque, N.M. 87109
(505) 924-2810

DWG NO: EQP36

DRAWN BY: AJK	DATE: 7/27/2021	REV
CHECKED BY: E.FILMER	DATE: 7/27/2021	WEIGHT: 219.85
SHEET: 1 of 1	SCALE: NTS	